HOLLYLAND

Creativity Together

Mars M1

User Manual

V1.0.1

Introduction

Thank you for purchasing Hollyland Mars M1.

This wireless transceiving monitor adopts the latest image encoding and decoding technology and 5G frequency band transmission technology. It can work either as a transmitter or receiver, achieving an incredible LOS range and ultra-low latency for wireless video transmission.

This User Manual will guide you through the installation and use of Mars M1.

Packing List

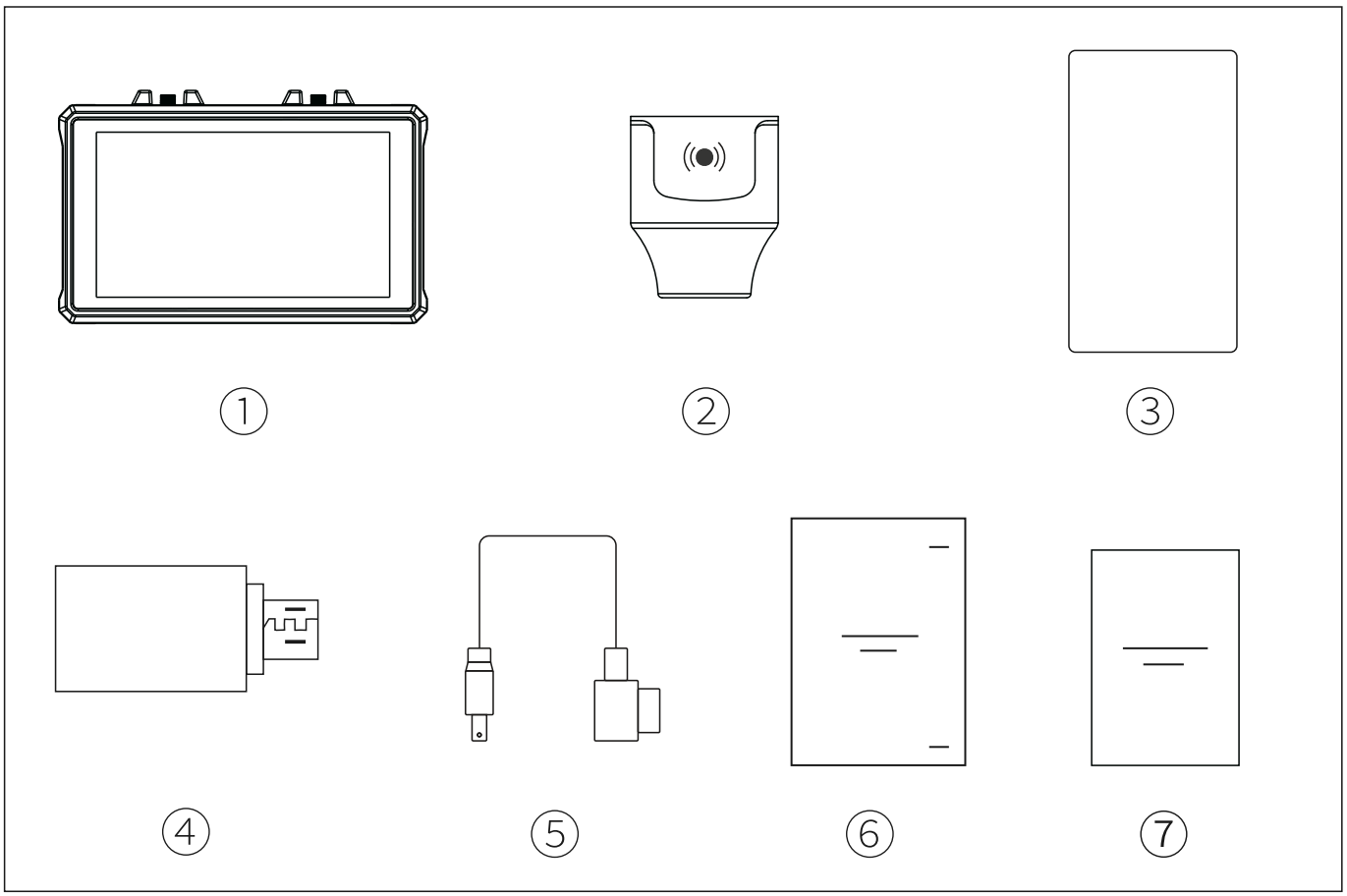

Packing List

① Monitor	×1
② Capsule Antenna	×2
③ Tempered Glass Screen Protector	×1
④ OTG Adapter	×1
⑤ D-Tap to DC Cable	×1
⑥ User Manual	×1
⑦ Warranty Card	×1

Note: The amount of the items listed above depends on the package edition.

Product Interfaces

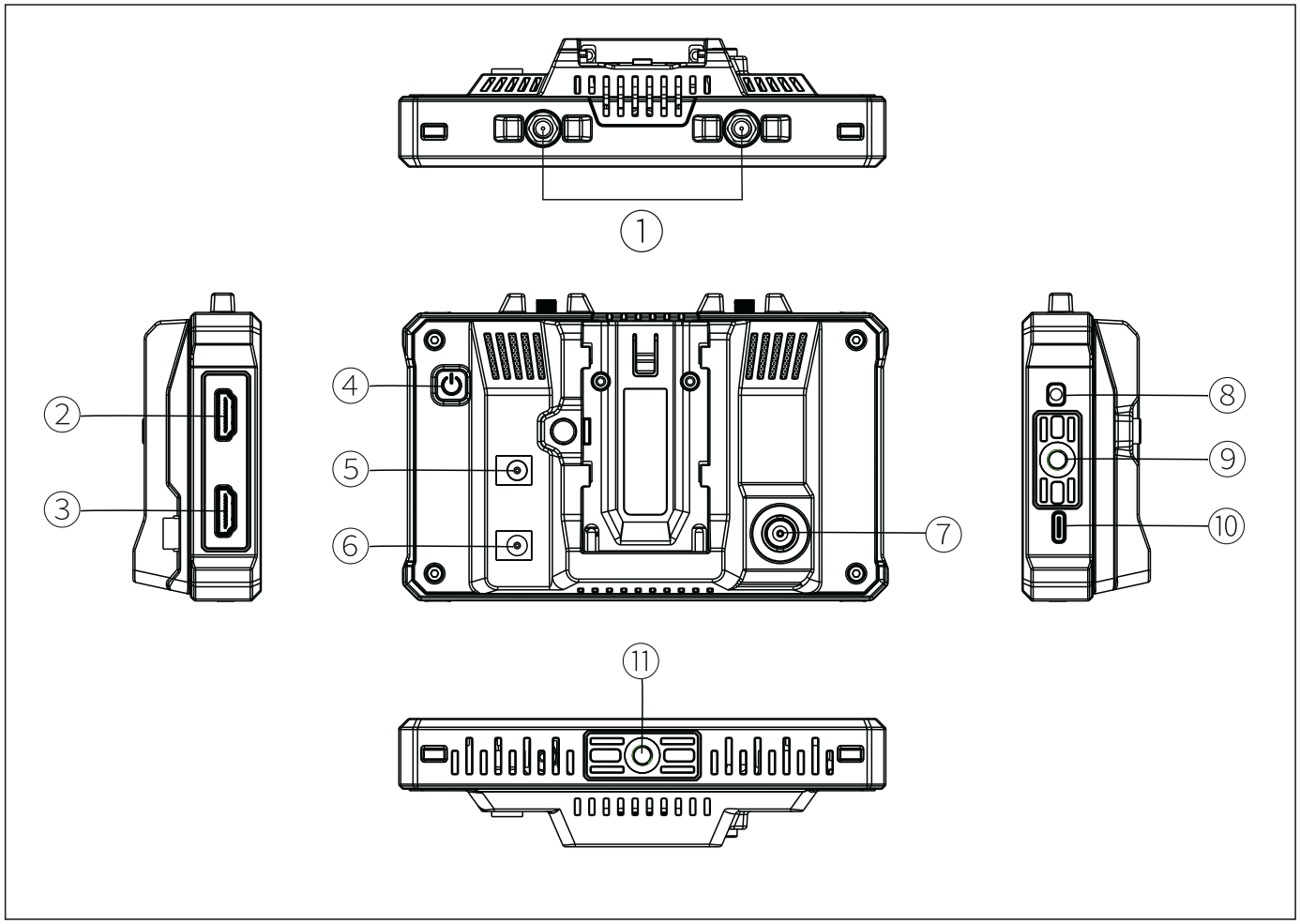

① RP-SMA Antenna Male Connector
② HDMI Input
③ HDMI Output/Loopout
④ Power Button
⑤ DC Output (Power Supply to External Devices)
⑥ DC Input (Power Supply to the Monitor)
⑦ SDI Input
⑧ 3.5mm Headphone Jack
⑨ 1/4 Threaded Hole
⑩ USB Type-C Interface
⑪ 1/4 Threaded Hole

Quick Guide

Power On

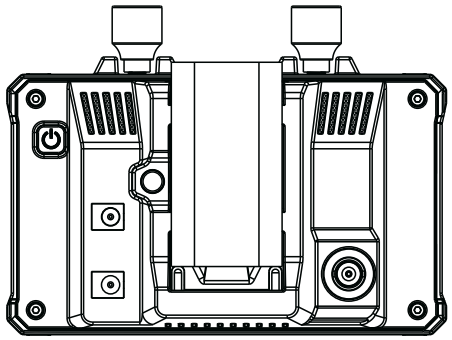

Step 1: Install the F970 battery on the device or connect the device to DC power.

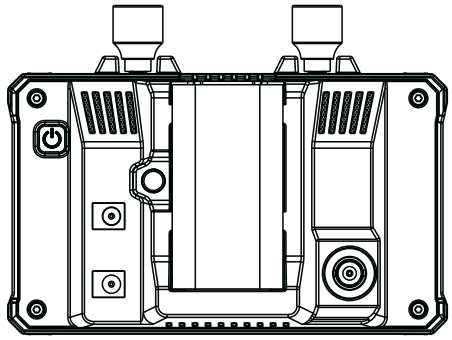

Step 2: Press and hold the power button for 3 seconds to turn on the device.

Setting up as Transmitting Monitor

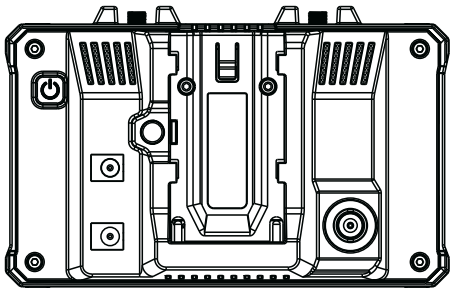

Step 1: Connect the device to the video source via SDI or HDMI, and wait for the screen to display content normally.

Step 2: Tap the icon in the lower right corner on the screen to enter the setting interface.

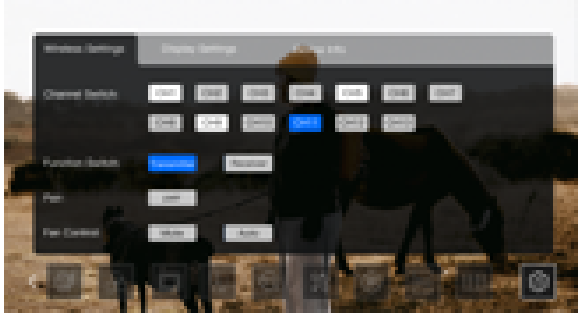

Step 3: Tap **Pair** to start pairing with a receiver. The system is compatible with any Hollyland Mars series receiver.

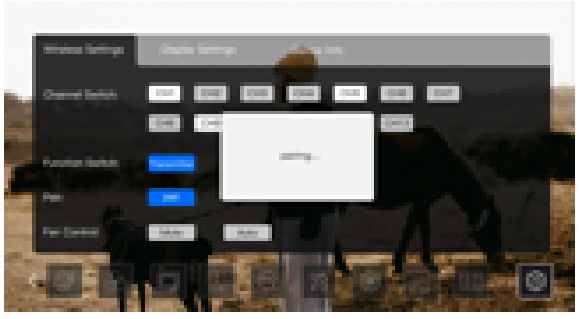

Step 4: A message indicating that the connection is successful will be displayed on the receiver when the pairing is successful. If the transmitter has video source input, content will be displayed on both the Mars M1 monitor and the receiver.

Quick Guide

Setting up as Receiving Monitor

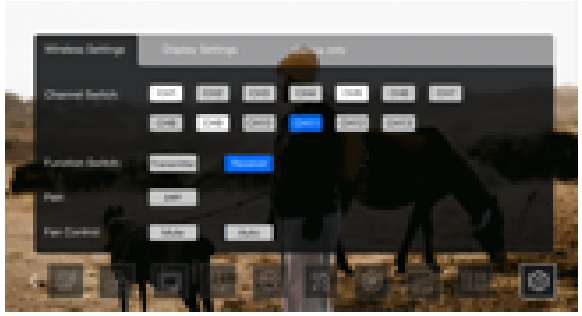

Step 1: Tap **Pair** on the setting interface to start pairing with a transmitter. The system is compatible with any Hollyland Mars series transmitter.

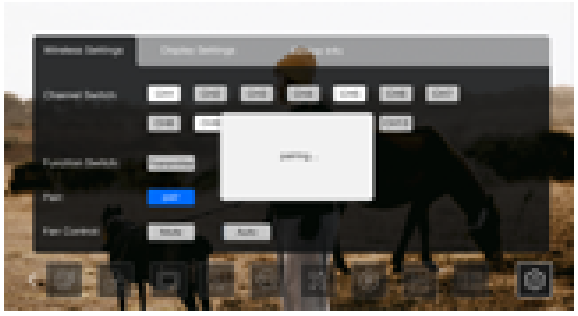

Step 2: When the pairing is successful,and if the transmitter has video source input, content will be displayed on the Mars M1 monitor.

Unlock/Lock Screen

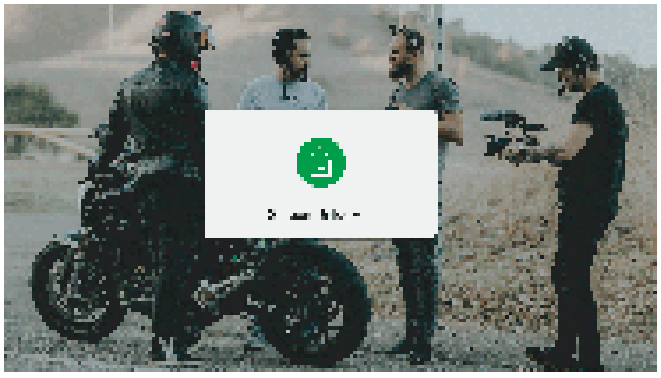

Unlock screen: Press the power button to unlock the device.

Lock screen: Press the power button to lock the device.

Note: It is forbidden to display an image or text on the LCD screen for an extended time. Otherwise, part of the image or text may burn in the screen and leave a ghost image.

Settings

Frequency Settings
Select a channel in the frequency list for the device.
Note: Some mobile devices do not support WiFi connection under CH3–CH10 frequencies. Please switch to other frequencies for WiFi connection.

Frequency Setting:							
	CH 1	CH 2	CH 3	CH 4	CH 5	CH 6	CH 7
	CH 8	CH 9	CH10	CH 11	CH12	CH13	

Device Mode Switch

The Mars M1 monitor can be switched between the transmitter and receiver modes. You can select a mode and wait for the device to restart for the mode to take effect.

Device Mode Switch :	Transmitter	Receiver

Quick Guide

Pairing

After the device is powered on and the channel number is displayed on the screen, the device is ready for pairing.
One-to-one pairing:Start pairing on both the transmitter and receiver at the same time .
One-to-two pairing: After the transmitter is paired with receiver 1, the transmitter is then paired with receiver 2. The transmitter cannot be paired with two receivers at the same time.
Note: Mars M1 is compatible with Mars 300 Pro and Mars 400s Pro.

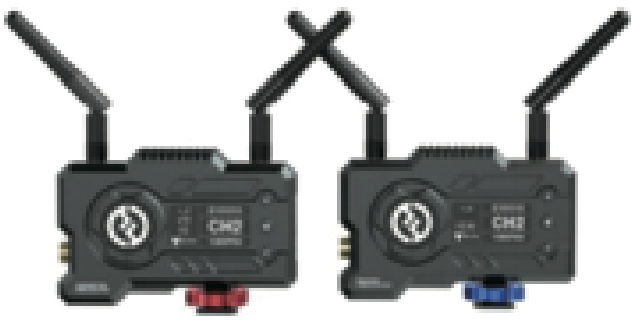

Firmware Upgrade

1. Copy the firmware upgrade file to a USB flash drive.
2. Turn on the device, attach the USB flash drive with the OTG adapter, and connect the OTG adapter to the Mars M1 monitor via the USB Type-C interface.
3. Wait for the device to automatically enter the system upgrade interface.
4. After the upgrade is complete, wait for the device to restart automatically for the upgrade to take effect.

Note: Please ensure a stable power supply to the device during the upgrade process.

APP Operations

App Installation and Monitoring on iOS and Android Systems
1. Search for the HollyView app on App Store or Google Play, download the app, and install the app on a mobile device.
2. Pairing through auto scanning: Launch the app and start auto scanning for pairing with the Mars M1 monitor. Once paired, content from the monitor will be displayed on the app interface.
3. Pairing through manual device ID input: Launch the app and manually enter the device ID for pairing. Once paired, content from the monitor will be displayed on the app interface.

LUT Settings

Tap the LUT icon in the main menu at the bottom of the Mars M1 screen to access the LUT setting interface and perform the following operations:

LUT Import

1. Store the LUT files on a USB flash drive which is formatted as FAT32, attach the USB flash drive to the OTG adapter, and connect the OTG adapter to the Mars M1 monitor via the USB Type-C interface.
2. Tap the LUT icon in the main menu, select the **LUT Import** option from the displayed dialog box, and wait for the system to retrieve and import the LUT files from the USB flash drive. Note: The suffix of the LUT files must be . **cube**, and the file name cannot exceed 128 characters.
3. Select the LUT file to be imported, then tap an option from the F1, F2, F3, F4, and F5 options in the displayed dialog box for subsequent file location.
4. Tap **LUT Import** to import the LUT file to the corresponding option.

   RGB and BGR Color Charts: The default option of the system is the RGB color chart. You can tap the toggle icon in the menu to switch to the BGR color chart.

LUT Application

1. Tap the LUT icon in the main menu to activate the function. The LUT file on the F1 options will be applied by default.
2. Tap the F2, F3, F4, or F5 options to select the corresponding LUT file for application.
3. Tap the F1, F2, F3, F4, or F5 options again to deselect the corresponding LUT file.
4. Tap the LUT icon or elsewhere on the screen to exit the LUT setting interface.

   Viewing the LUT File Name: After the selected LUT file is applied, the corresponding LUT file name will be displayed on the top info bar.

   Note: The five camera LUT files are as follows by default:

   F1: **Canon_C-Log.cube**
   F2: **Canon_C-Log2.cube**
   F3: **Sony_S-Log.cube**
   F4: **Sony_S-Log2.cube**
   F5: **Slog3to709TypeA.cube**

Parameters

	Transmitter Mode	Receiver Mode
Video Input Interface	3G-SDI IN (BNC female) HDMI1.4b IN (Type-A female)	
Video Output Interface	HDMI1.4b LOOP OUT (Type-A female)	HDMI OUT (Type-A female)
Antenna Interface	Two RP-SMA male interfaces	Two RP-SMA male interfaces
Power Input Interface	DC IN (2.0mm core socket)	DC IN (2.0mm core socket)
Power Output Interface	DC OUT (2.0mm core socket)	DC OUT (2.0mm core socket)
Headphone Jack	3.5mm jack	3.5mm jack
Firmware Upgrade Interface	USB Type-C	USB Type-C
Screen Size	5.5” touch screen	5.5” touch screen
Screen Resolution	1920x1080 pixels	1920x1080 pixels
Pixel Density	403PPI	403PPI
Aspect Ratio	16：9	16：9
Brightness	1,000nits	1,000nits
Contrast Ratio	1000：1	1000：1
Supply Voltage Range	DC IN: 7–16V, nominal 12V NP-F battery: 6.8V–8.4V	DC IN: 7–16V, nominal 12V NP-F battery: 6.8V–8.4V
Output Voltage Range	8.4V±5%	8.4V±5%
Power Consumption	＜14. 5W(without DC output)	＜10W(without DC output)
Net Weight	380g (13.5oz) (antennas excluded)	380g (13.5oz) (antennas excluded)
Dimension	(LxWxH): 152x96x40mm (5.98"x3.78"x1.57") (antennas excluded)	(LxWxH): 152x96x40mm (5.98"x3.78"x1.57") (antennas excluded)
Operating Frequency	5.1–5.8GHz	5.1–5.8GHz
Codec Technology	H.264	H.264
Bit Rate	12Mbps	12Mbps
TX Power	Max. 21dBm	Max. 21dBm
RX Sensitivity	/	–80dBm

Parameters

Latency	0.08s	
Range	450ft (150m)	
Bandwidth	20MHz	
Modulation Mode	802.11n	
Audio Input Format	2 audio channels for the 3G-SDI and 8 audio channels for the HDMI 1.4b	
Audio Output Format	8 audio channels for the HDMI 1.4b	
Operating Temperature	-10°C to 60°C	
Storage Temperature	-40°C to 60°C	
ESD Protection	Contact discharge: ±6kV; air discharge: ±8kV (test data)	
Input Format	HDMI:	/
	720P50/59.94/60 Hz	/
	1080I50/59.94/60 Hz	/
	1080P23.98/24/25/29.97/30/50/59.94/60 Hz	/
	3840x2160P23.98/24/25/29.97/30 Hz	/
	4096x2160P23.98/24/25/29.97/30 Hz	
	SDI:	
	720P50/59.94/60 Hz	/
	1080I50/59.94/60 Hz	/
	1080P23.98/24/25/29.97/30/50/59.94/60 Hz	/
Output Format	HDMI IN & HDMI LOOP OUT:	HDMI OUT:
	720P50/59.94/60 Hz	720P50/59.94/60 Hz
	1080I50/59.94/60 Hz	1080i50/59.94/60Hz
	1080P23.98/24/25/29.97/30/50/59.94/60 Hz	1080P23.98/24/25/29.97/30/50/59.94/60 Hz
	3840x2160P23.98/24/25/29.97/30 Hz	1080P50/59.94/60
	4096x2160P23.98/24/25/29.97/30 Hz	1080P50/59.94/60
	SDI IN & HDMI LOOP OUT	
	720P50/59.94/60 Hz	720P50/59.94/60 Hz
	1080I50/59.94/60 Hz	1080i50/59.94/60Hz
	1080P23.98/24/25/29.97/30/50/59.94/60 Hz	1080P23.98/24/25/29.97/30/50/59.94/60 Hz

Note: The frequency band and TX power vary by country and region.

Safety Precautions

Do not place the product near or inside heating devices (including but not limited to microwave ovens, induction cookers, electric ovens, electric heaters, pressure cookers, water heaters, and gas stoves) to prevent the battery from overheating and exploding.

Support

If you encounter any problems in using the product or need any help, please contact Hollyland Support Team via the following ways:

Hollyland Product User Group

HollylandTech

HollylandTech

Support@hollyland-tech.com

www.hollyland-tech.com

Statement

All copyrights belong to Shenzhen Hollyland Technology Co., Ltd. Without the written approval of Shenzhen Hollyland Technology Co., Ltd, no organization or individual may copy or reproduce part or all of the content of the text and may not disseminate it in any form.

Trademark Statement

All trademarks are owned by Shenzhen Hollyland Technology Co., Ltd.

Note: Due to product version upgrades or other reasons, this User Manual will be updated from time to time. Unless otherwise agreed, this document is provided as a guide for use only. All representations, information, and recommendations in this document do not constitute warranties of any kind, express, or implied.

FCC Requirement

Any changes or modifications not expressly approved by the party responsible for compliance could void the user's authority to operate the device. This device complies with Part 15 of the FCC Rules. Operations are subject to the following two conditions:

(1) This device may not cause harmful interference.

(2) This device must accept any interference received, including interference that may cause undesired operations.

FCC Radiation Exposure Statement:
The device has been tested and complies with FCC SAR limits.

Note:

This device has been tested and found to comply with the limits for a Class B digital device, pursuant to Part 15 of the FCC Rules. These limits are designed to provide reasonable protection against harmful interference in a residential installation. This device generates, uses, and can radiate radio frequency energy, and if it is not installed and used in accordance with the instructions, it may cause interference to radio communications. However, there is no guarantee that interference will not occur in a particular installation. If this device does cause harmful interference to radio or television reception, which can be determined by turning the device off and on, you are encouraged to try to correct the interference by one or more of the following measures:

– Reorient or relocate the receiving antenna.
– Increase the distance between the device and receiver.
– Connect the device to an outlet on a circuit different from that to which the receiver is connected.
– Consult the dealer or an experienced radio/TV technician for help.